Totem Pines
Hollis

GRAIVER HOMES INC

Exhibit B

Please Note: Exterior and interior design of this plan is for visual purposes only. This exterior design may not reflect what the buyers package may include in their purchase. The signed Specification Sheet with buyers Package Choice supersede any and all details show on this plan. This plan is used for Marketing and Advertising purposes only.

The David (1,848 sq ft) – Front

Totem Pines
Hollis

GRAIVER HOMES INC

The David – Rear

Totem Pines
Hollis

GRAIVER HOMES INC

The David – Left

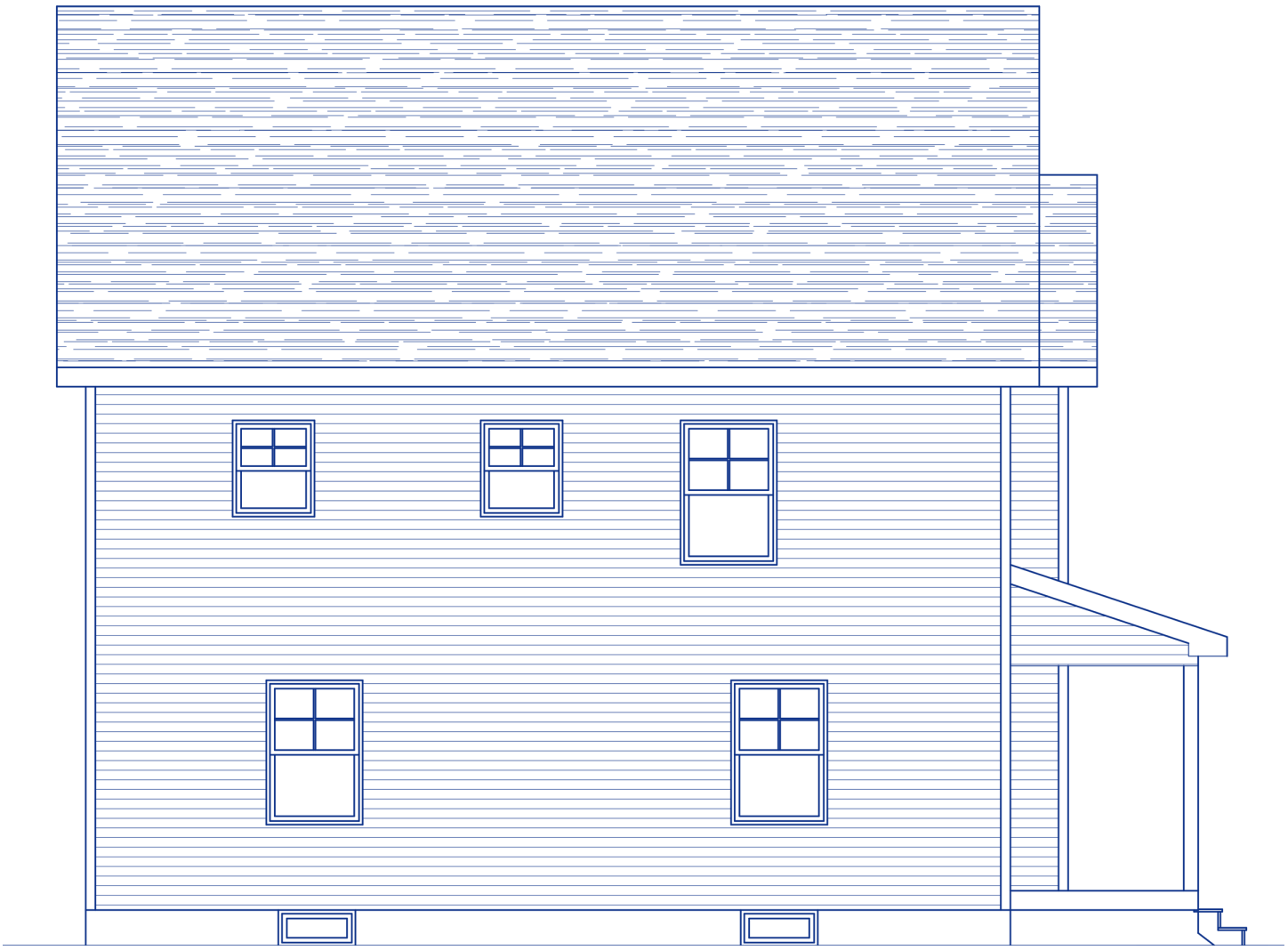

Totem Pines
Hollis

GRAIVER HOMES INC

The David – Right

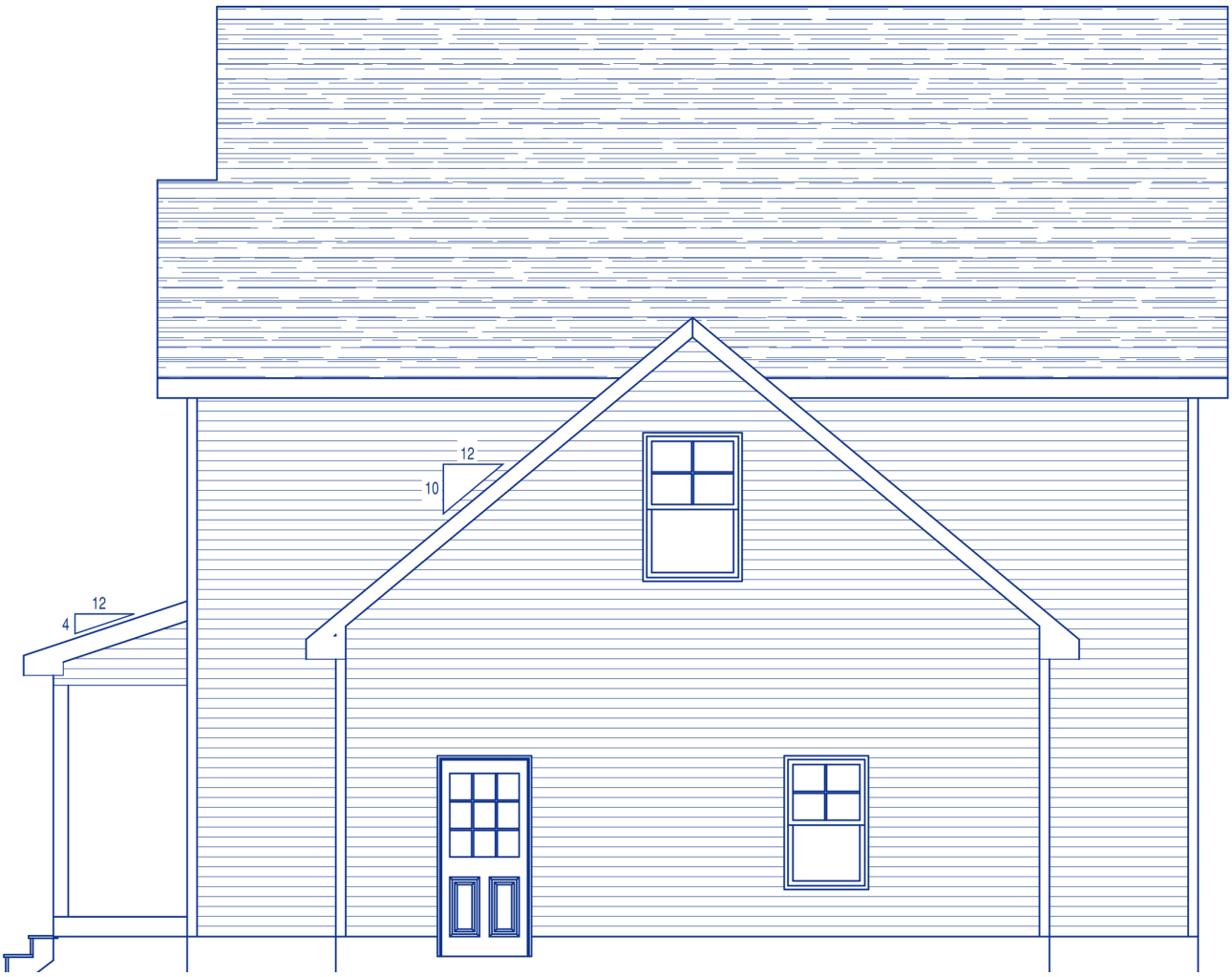

Totem Pines
Hollis

GRAIVER HOMES INC

The David – First Floor Plan

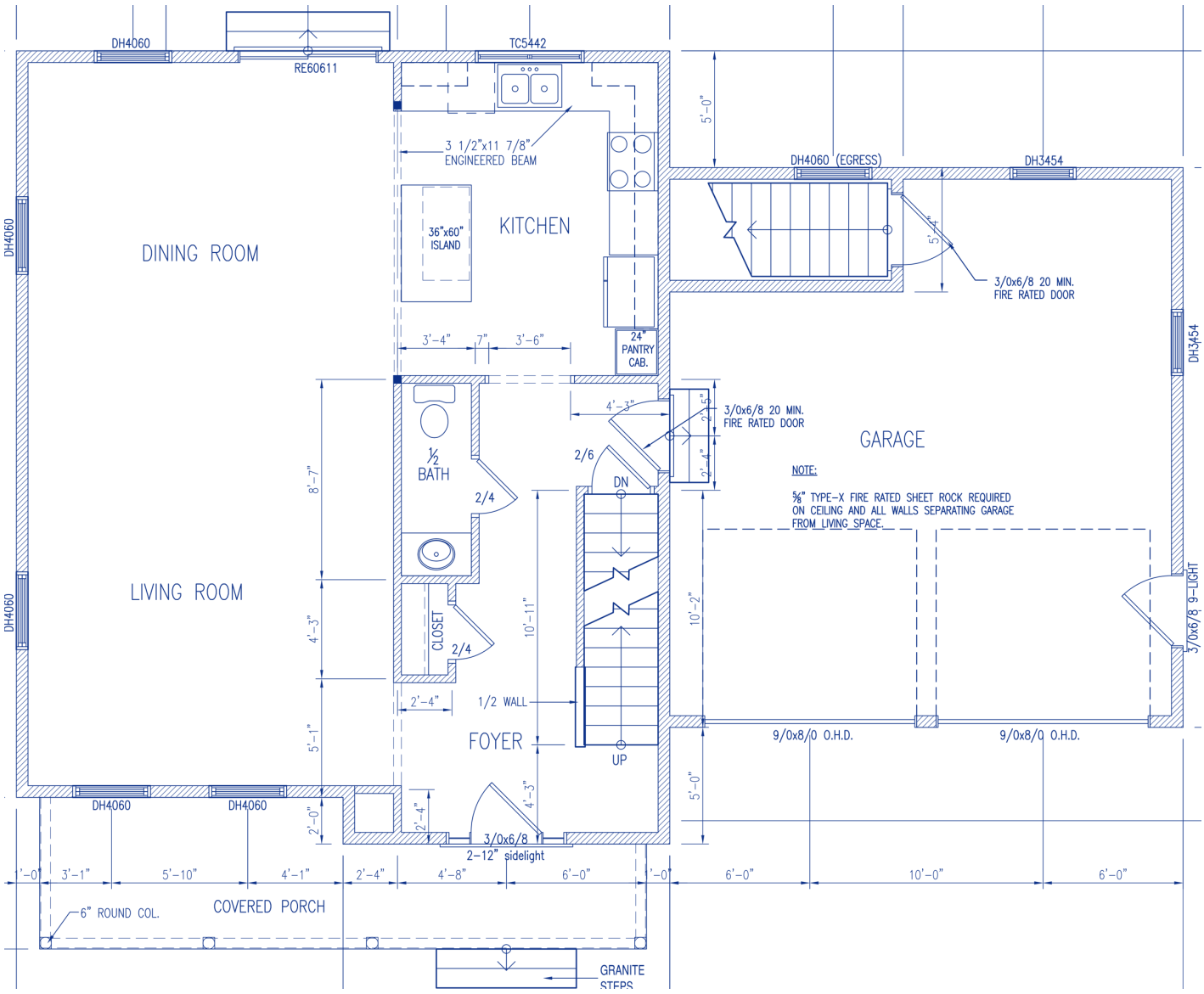

Totem Pines
Hollis

GRAIVER HOMES INC

The David – Second Floor Plan

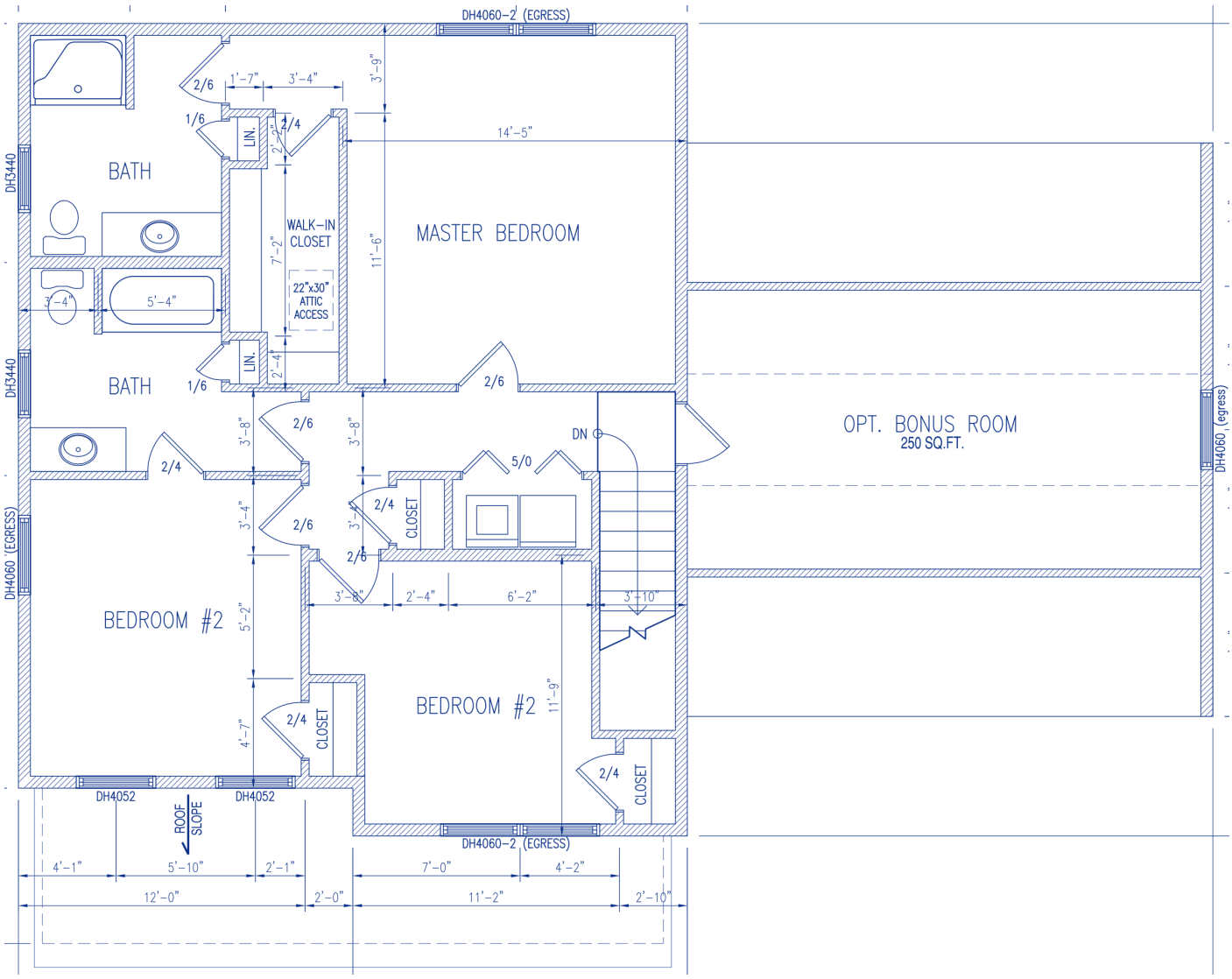

GRAIVER HOMES INC

The David – Foundation Plan

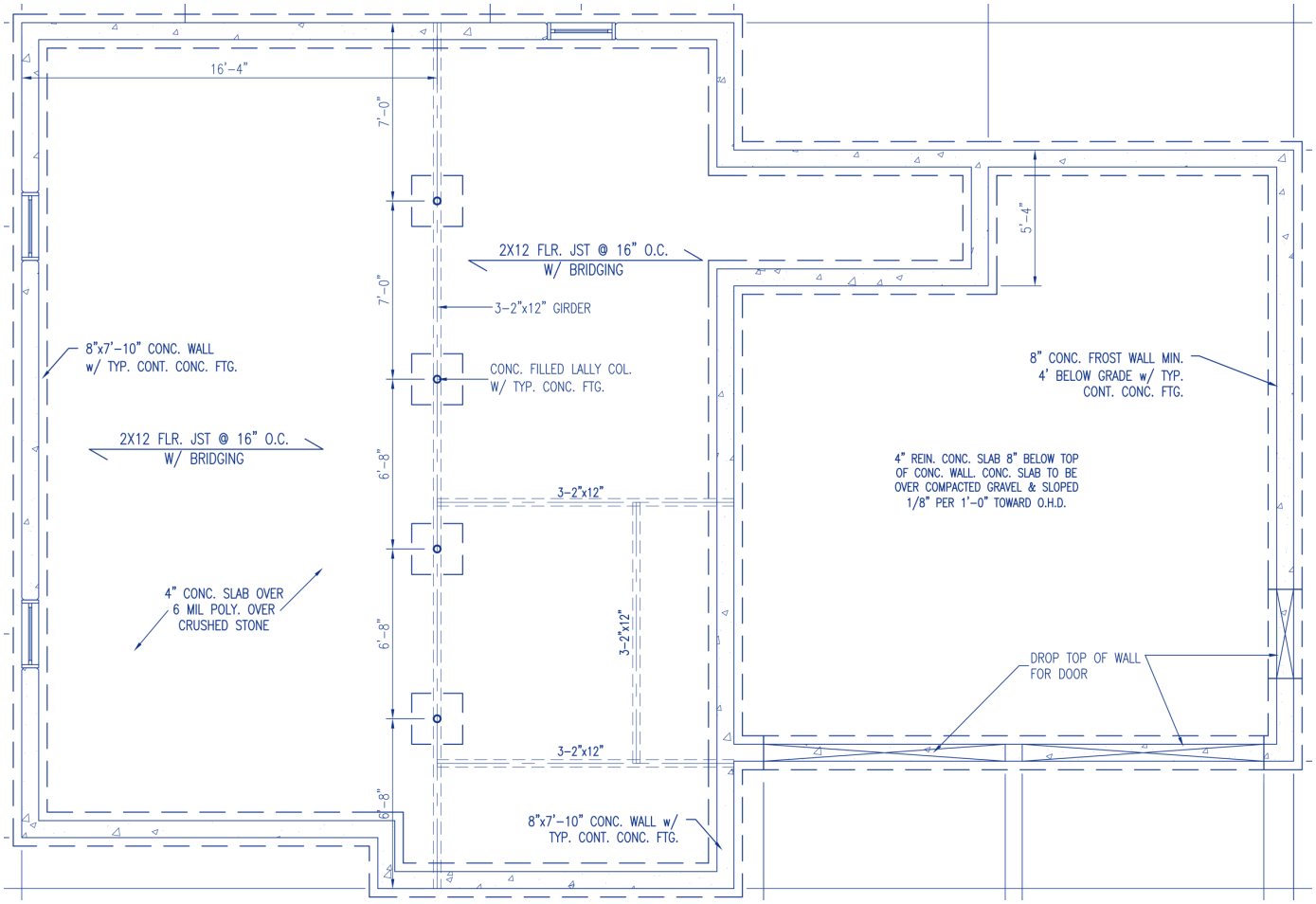

GRAIVER HOMES INC

The David – Cross-section

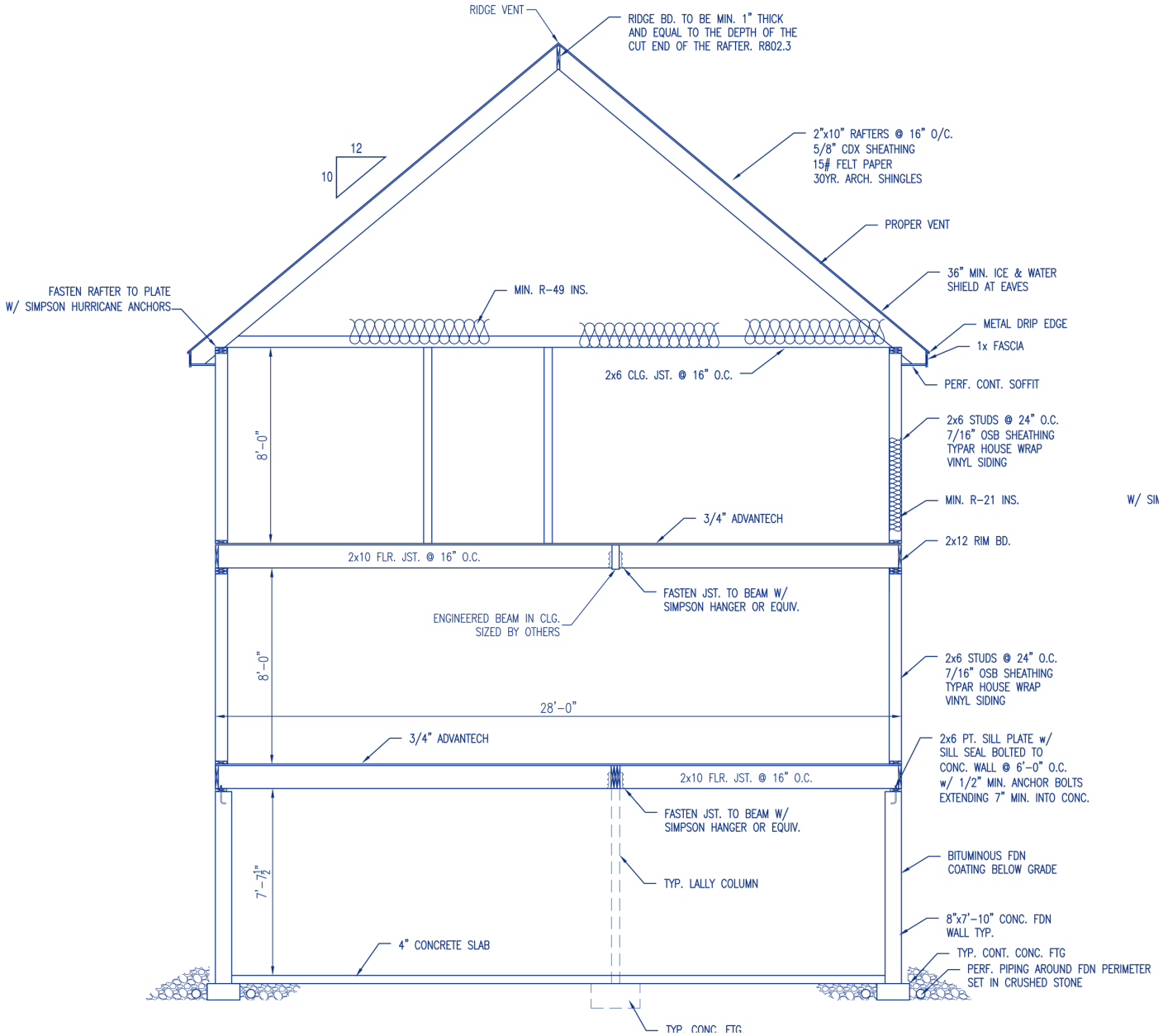

GRAIVER HOMES INC

Kitchen – Perspective 1

Note: Kitchen and Bathroom cabinet design on the house plan are for visual purposes only. The color and door style per Buyer's package choice and picture may not reflect buyer's actual choices. Kitchen and bath layout/design is subject to a final measurement and may vary from builder's initial approved designs/layout. Drawer and door configuration may change due to buyer's product line choice.

GRAIVER HOMES INC

Kitchen – Perspective 2

GRAIVER HOMES INC

Master Vanity

Guest Vanity

Totem Pines Hollis

GRAIVER HOMES INC

Kitchen Plan

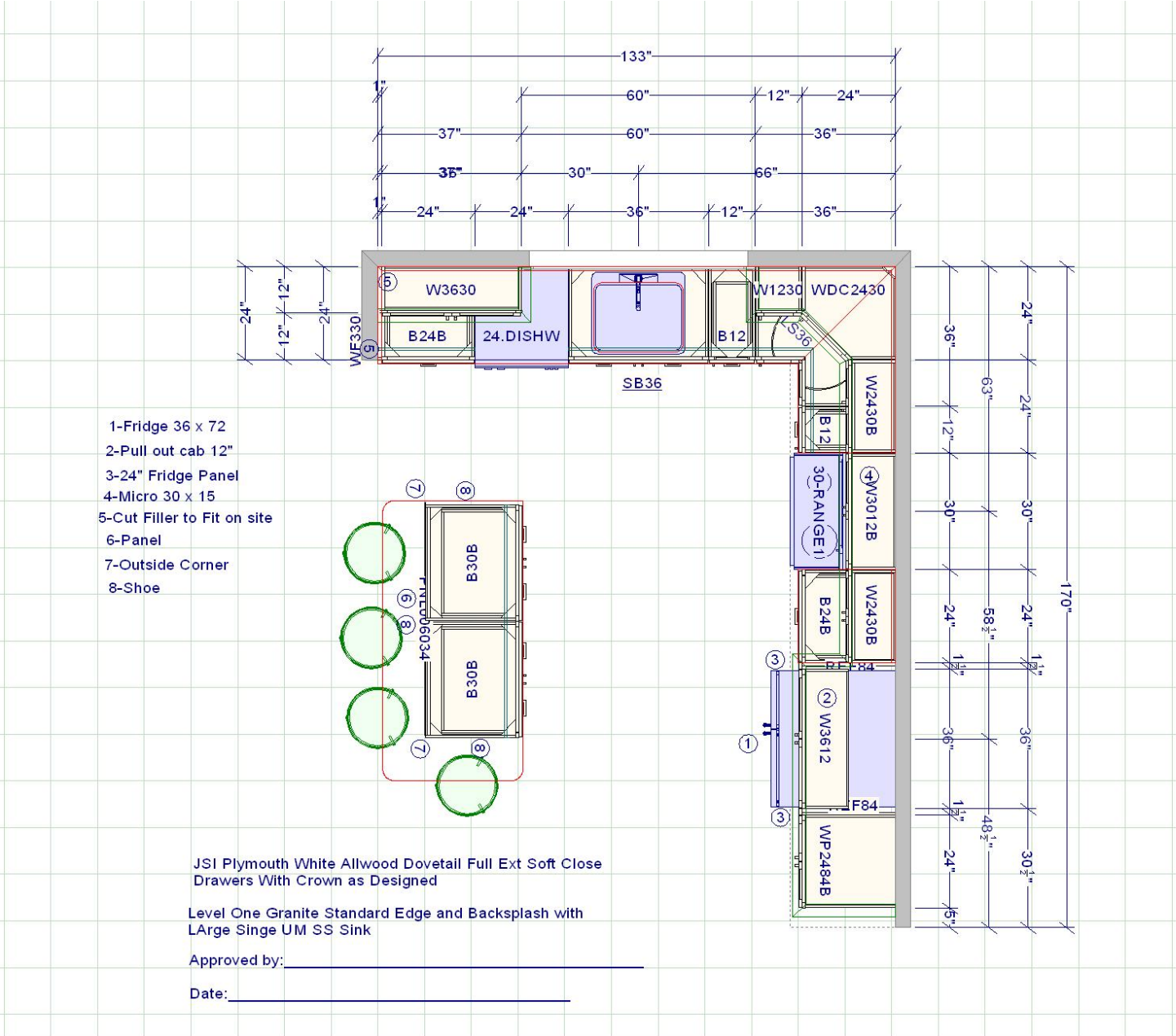

GRAIVER HOMES INC

Vanity Plans

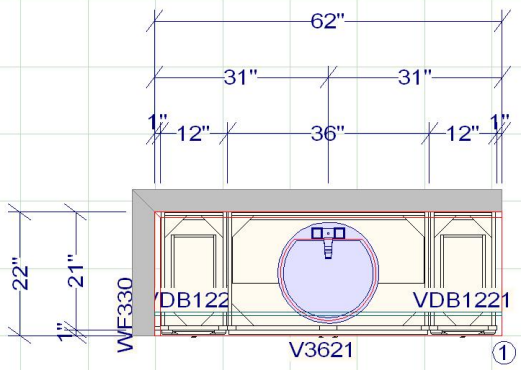

Master

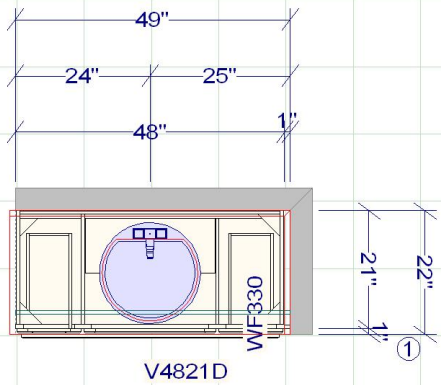

Guest

1-Cut Fillers to Fit on Site

JSI Plymouth Allwood Dovetail 3/4 Ext Side Mount Glides as Designed

Vanity Level One Granite Standard Edge and Backsplsh with White UM Bowls

Approved by:_____

Date:_____