GRAIVER HOMES INC

Please Note: Exterior and interior design of this plan is for visual purposes only. This exterior design may not reflect what the buyers package may include in their purchase. The signed Specification Sheet with buyers Package Choice supersede any and all details show on this plan. This plan is used for Marketing and Advertising purposes only.

The Casco Bay (1,614 sq ft) – Front

GRAIVER HOMES INC

The Casco Bay – Rear

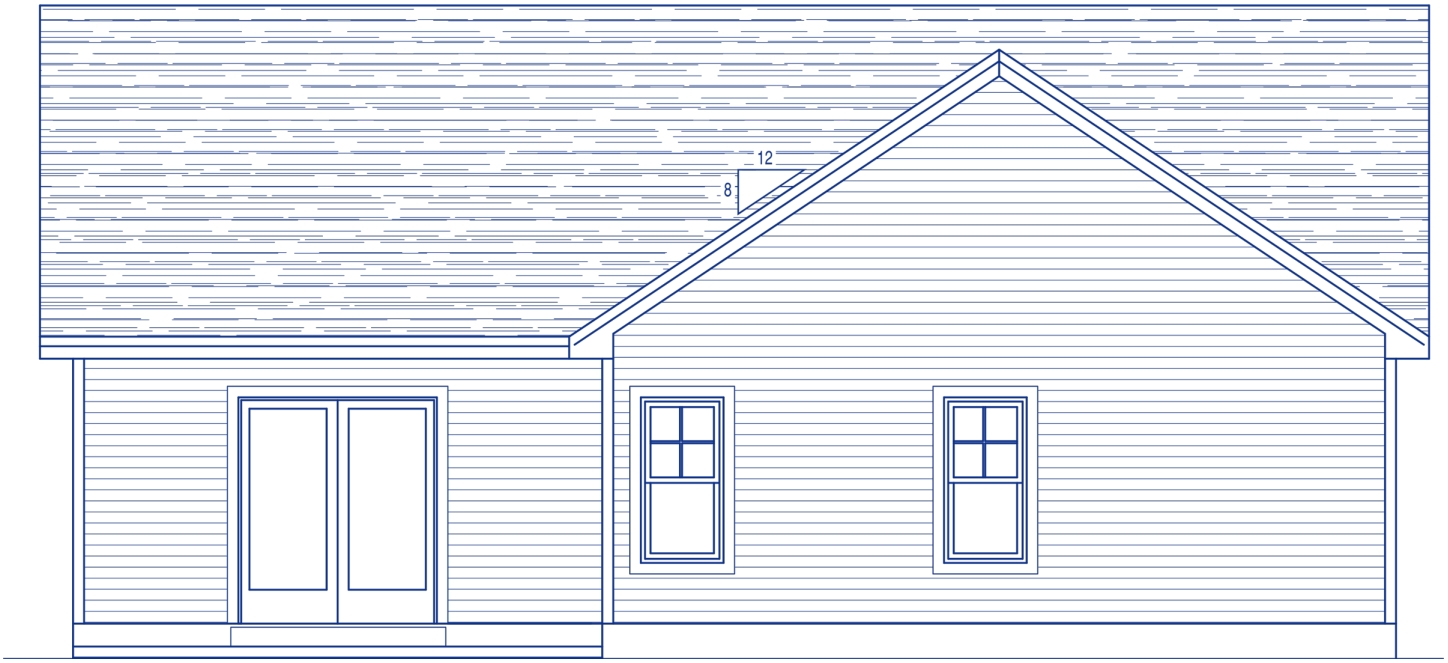

GRAIVER HOMES INC

The Casco Bay – Right

GRAIVER HOMES INC

The Casco Bay – Left

GRAIVER HOMES INC

The Casco Bay – First Floor

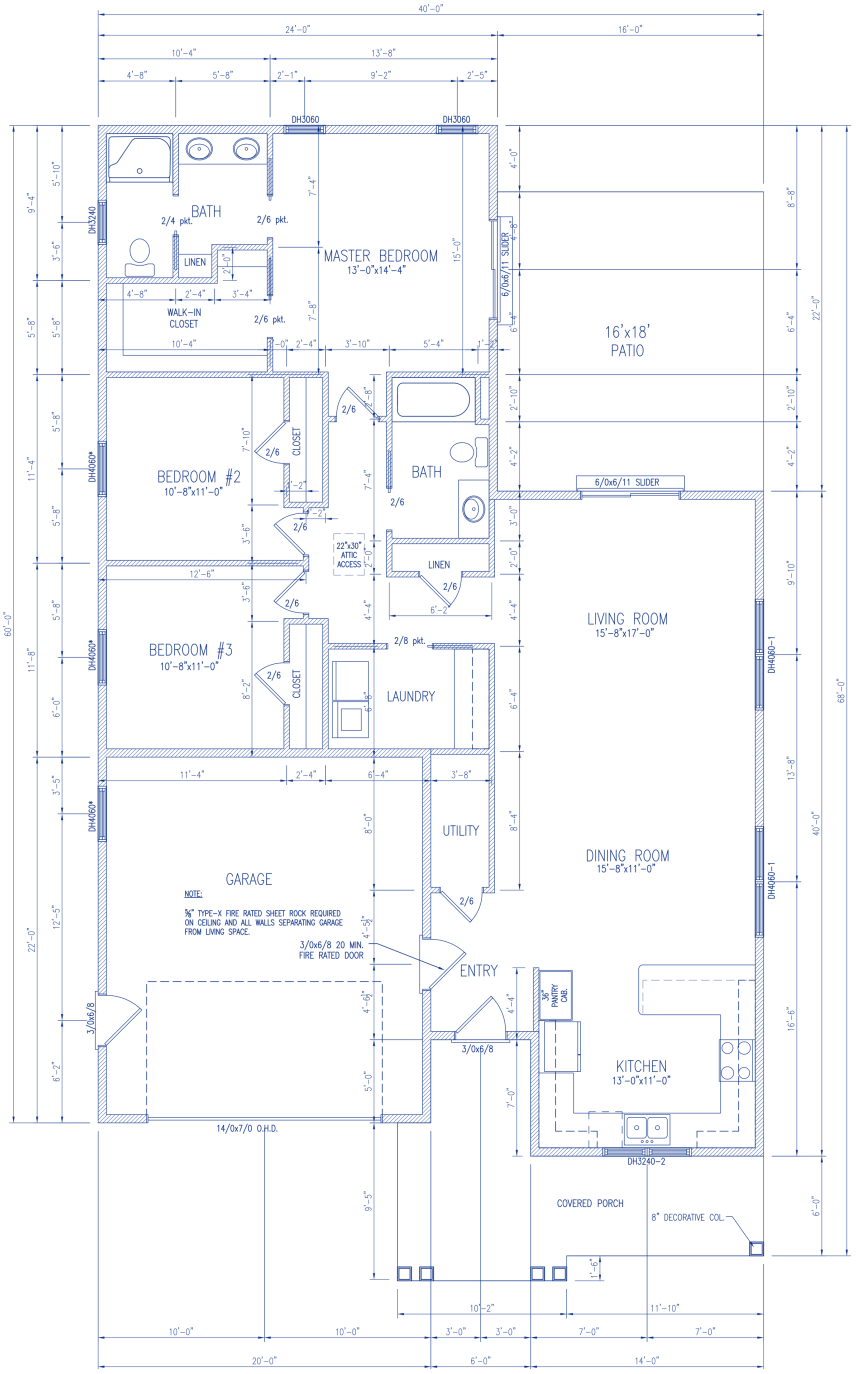

GRAIVER HOMES INC

The Casco Bay – Foundation

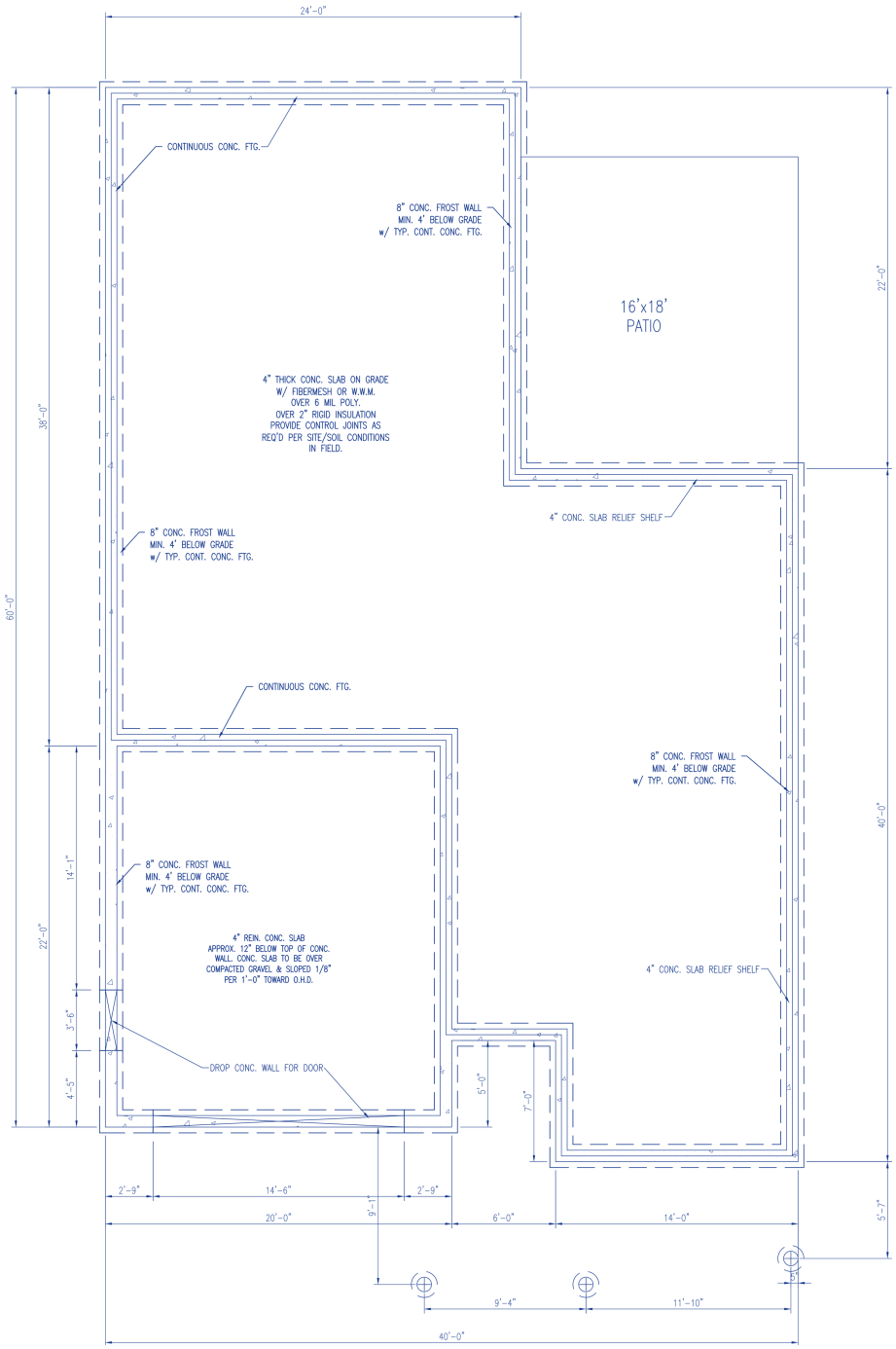

GRAIVER HOMES INC

The Casco Bay – Cross-section

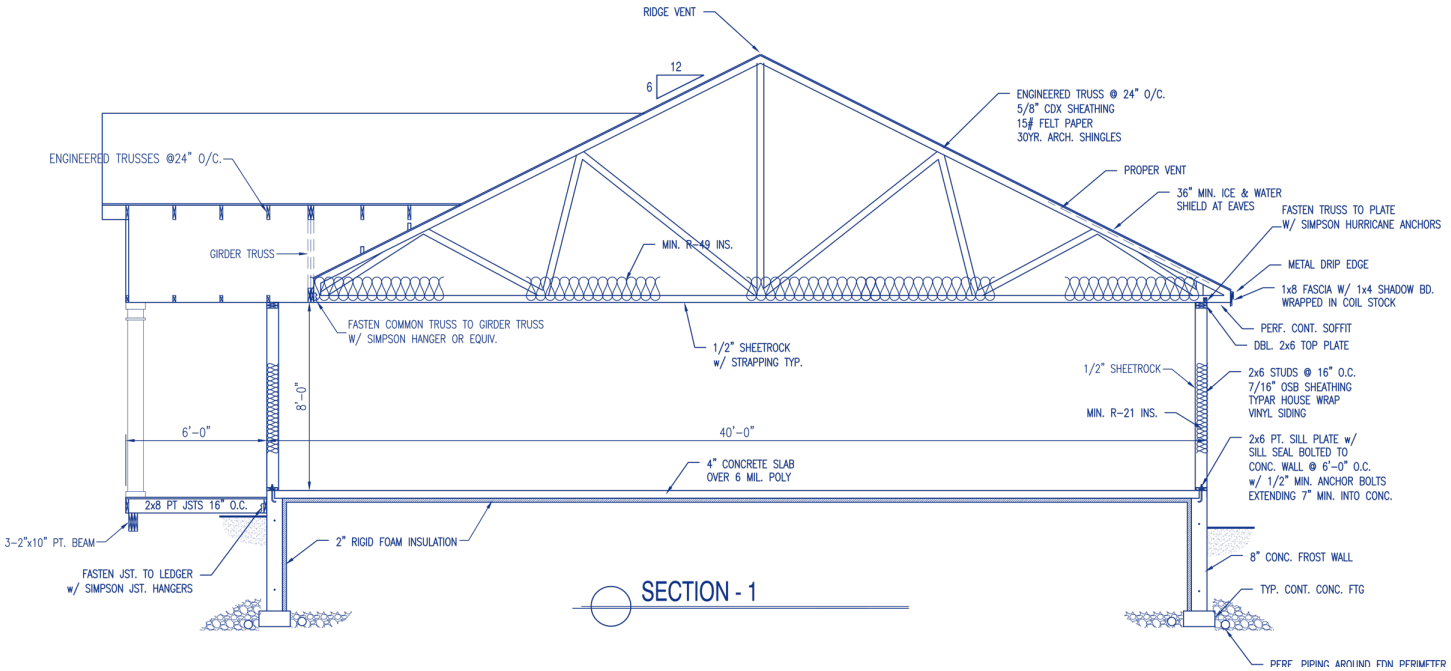

GRAIVER HOMES INC

Kitchen Perspective 1

Note: Kitchen and Bathroom cabinet design on the house plan are for visual purposes only. The color and door style per Buyer's package choice and picture may not reflect buyer's actual choices. Kitchen and bath layout/design is subject to a final measurement and may vary from builder's initial approved designs/layout. Drawer and door configuration may change due to buyer's product line choice.

GRAIVER HOMES INC

Kitchen Perspective 2

GRAIVER HOMES INC

Kitchen Perspective 3

GRAIVER HOMES INC

Vanities

GRAIVER HOMES INC

Kitchen Plan

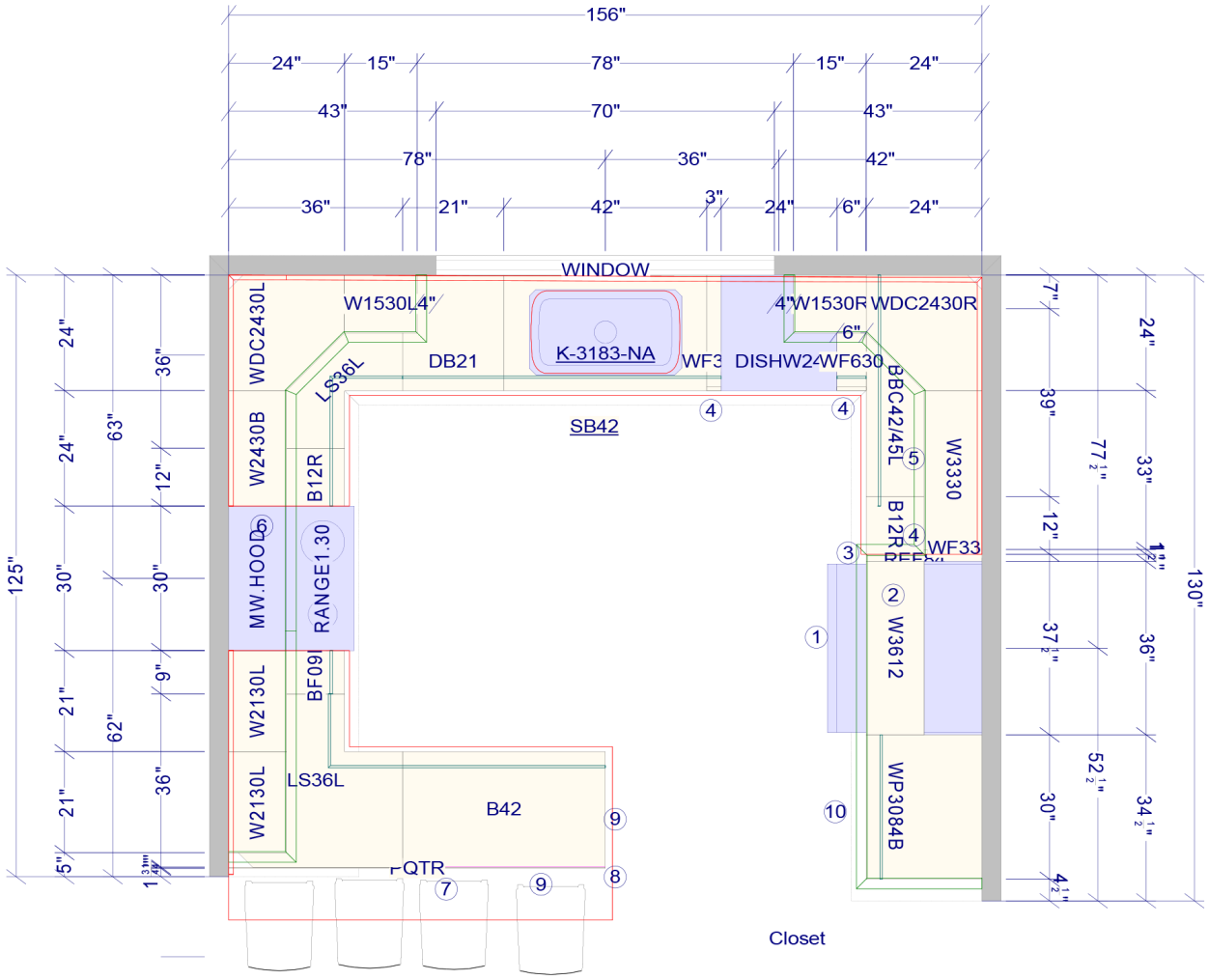

Vanities Plan

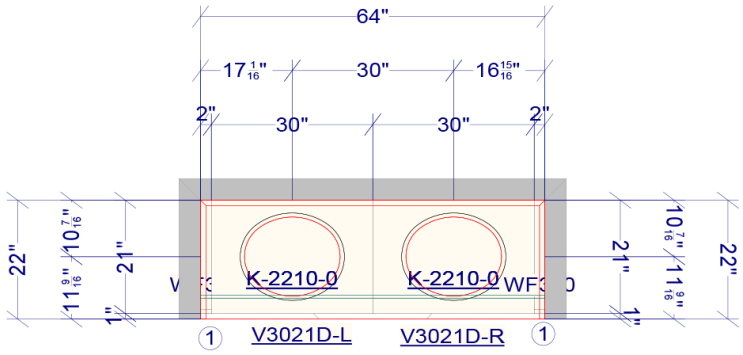

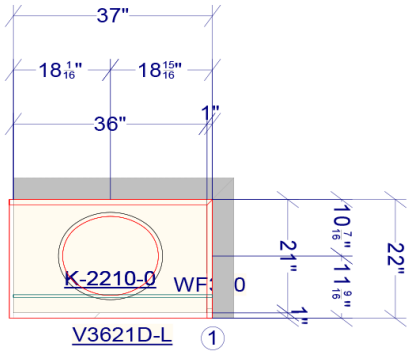

Guest